Side view

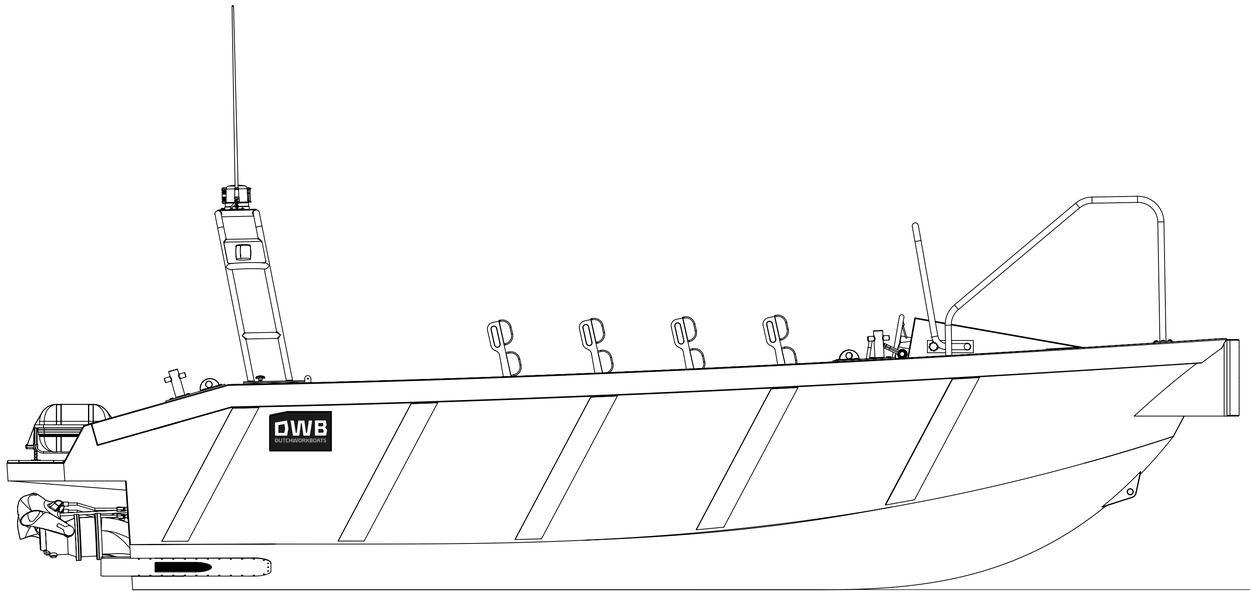

Front view

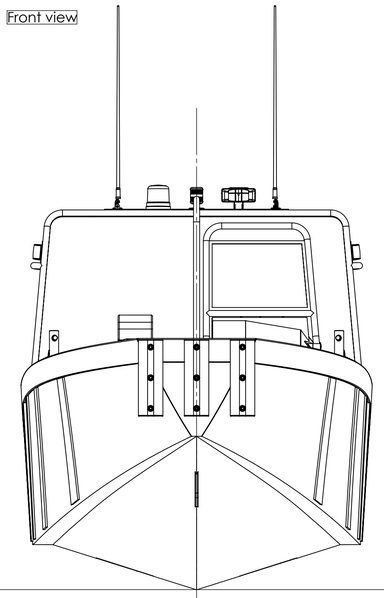

Base line

frame spacing 1000mm

Top view

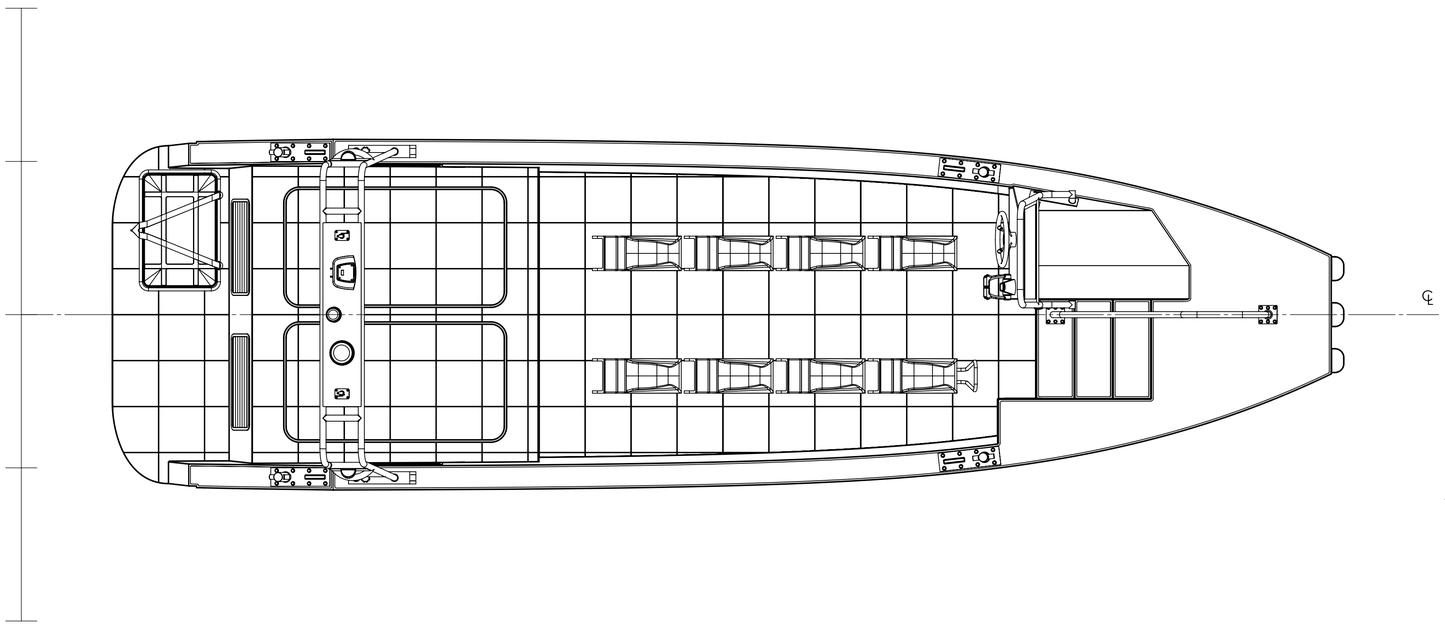

Rear view

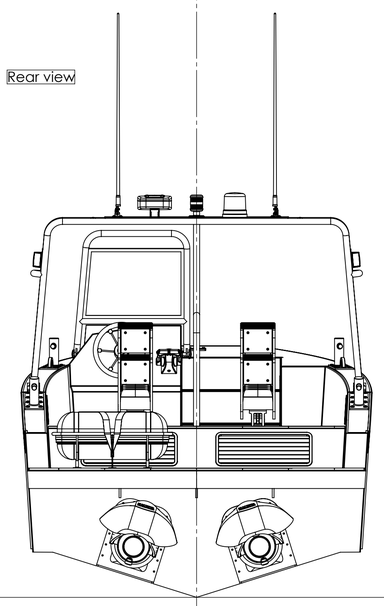

Base line

DWB DUTCHWORKBOATS	Dutchworkboats P.O. Box 1 1398 ZG Muiden The Netherlands				DO NOT SCALE DRAWING	REVISION
	NAME	SIGNATURE	DATE		TITLE: DWB 8.00 Crew	
DRAWN	Octaze		26-11-14			
CHK'D						
APPV'D						
MFG						
Q.A				MATERIAL:	DWG NO. DWB 8.00-2 001	A1
				WEIGHT:	SCALE:1:20	SHEET 1 OF 1